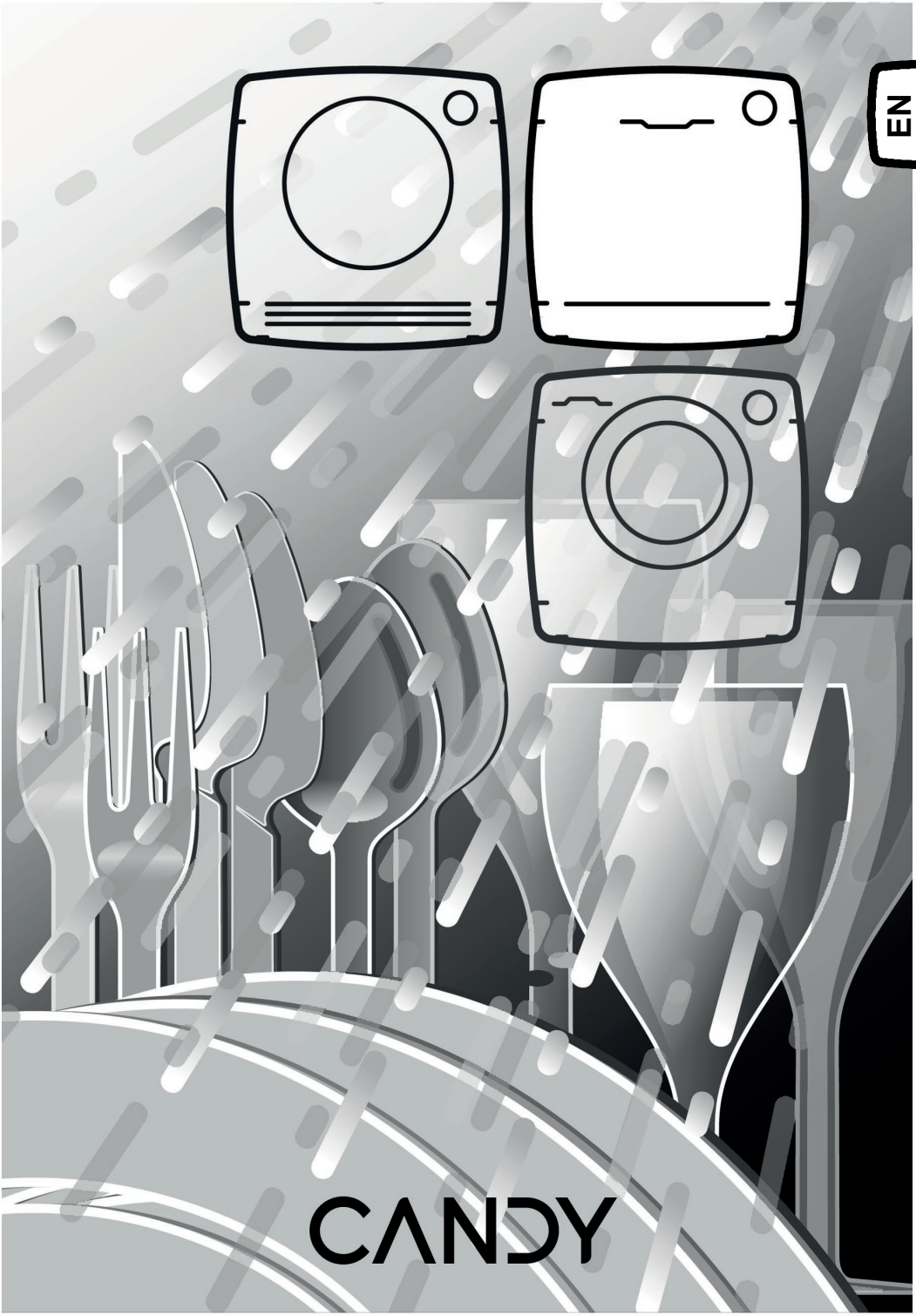

EN

CANDY

Thank you for choosing this product.
We are proud to offer the ideal product for you and the best complete range of home appliances for your daily routine.

Carefully read this manual for correct and safe appliance use and for helpful tips on efficient maintenance.

Only use the dish washer after carefully reading these instructions. We recommend you always keep this manual to hand and in good condition for any future owner.

Please check that the appliance is delivered with this instruction manual, the warranty certificate, the service centre address and the energy efficiency label. Each product is identified by a unique 16-digit code, also called the “serial number”, printed on the warranty certificate or on the serial plate found inside the door, on the upper right hand side. This code is a sort of product-specific ID card that you will need to use to register the product or if you need to contact the Technical Assistance Centre.

Fig. A

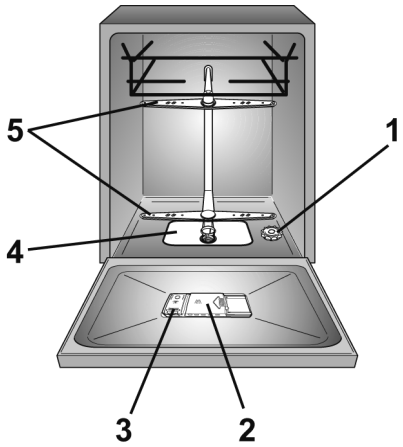

Contents

1. *GENERAL SAFETY RULES*
2. *WATER CONNECTION*
3. *LOADING THE SALT*
4. *ADJUSTING THE UPPER BASKET (ONLY ON SOME MODELS)*
5. *LOADING DISHES*
6. *INFORMATION FOR TEST LABORATORIES*
7. *LOADING THE DETERGENT*
8. *TYPES OF DETERGENT*
9. *LOADING THE RINSE AID*
10. *CLEANING THE FILTERS*
11. *PRACTICAL HINTS*
12. *CLEANING AND MAINTENANCE*
13. *DESCRIPTION OF THE CONTROL PANEL*
14. *TECHNICAL DATA*
15. *PROGRAMME SELECTION AND SPECIAL FEATURES*
16. *REMOTE CONTROL (Wi-Fi)*
17. *PROGRAMME LEGEND*
18. *WATER SOFTENER UNIT*
19. *TROUBLESHOOTING AND WARRANTY*
20. *ENVIRONMENTAL CONDITIONS*

1. GENERAL SAFETY RULES

- This appliances is intended to be used in household and similar applications such as:
  - Staff kitchen areas in shops, offices and other working environments;
  - Farm houses;
  - By clients in hotels, motels and other residential type environments;
  - Bed and breakfast type environments.

A different use of this appliance from household environment or from typical housekeeping functions, as commercial use by expert or trained users, is excluded even in the above applications. If the appliance is used in a manner inconsistent with this it may reduce the life of the appliance and may void the manufacturer's warranty. Any damage to the appliance or other damage or loss arising through use that is not consistent with domestic or household use (even if located in a domestic or household environment) shall not be accepted by the manufacturer to the fullest extent permitted by law.

- **for EU market**
  The appliance can be used by those aged 8 or over and by those with limited physical, sensorial or mental capacities, without experience or knowledge of the product, only if supervised or provided with instruction as to the operation of the appliance, in a safe way with awareness of the possible risks.

- **for Extra EU markets**
  This appliance is not intended for use by persons (including children) with reduced physical, sensory or mental capabilities, or lack of experience and knowledge, unless they have been given supervision or instruction concerning use of the appliance by a person responsible for their safety.

- Children should be supervised to ensure that they do not play with the appliance.

- Children of aged 3 and under should be kept away unless continuously supervised.

- If the supply cord is damaged, it must be replaced by a Special cord or assembly available from the manufactured or its service agent.

- Only use the hose-sets supplied with the appliance for the water supply connection (do not reuse old hose-sets).

- Water pressure must be between 0.08 MPa and 1 MPa.

- Make sure carpets or rugs do not obstruct the base or any of the ventilation openings.

- After installation, the appliance must be positioned so that the plug is accessible.

- Do not leave the door open in a horizontal position, in order to avoid potential dangers (e.g. tripping).

- For further information on the product or to consult the technical data sheet, please refer to the manufacturer's website.

- For the maximum number of place settings, see the relevant data plate attached to the product.

Electrical connections and safety instructions

- The technical details (supply voltage and power input) are indicated on the product rating plate.

- Make sure that the electrical system is earthed and complies with all applicable laws, and that the socket is compatible with the plug of the appliance.

The manufacturer declines all responsibility for any damage to people or property due to non-earthing of the machine.

- Ensure that the dishwasher does not crush power cables.

- In general it is not advisable to use adaptors, multiple plugs and/or extension cables.

WARNING:
The appliance must not be supplied through an external switching device, such as a timer, or connected to a circuit that is regularly switched on and off by a utility.

- Before cleaning or maintaining the dishwasher, unplug the appliance and turn off the water supply.

- Do not pull on the power cord or appliance to unplug the machine.

WARNING:
Water may reach very high temperatures during the wash cycle.

- Do not leave the appliance exposed to the elements (rain, sun, etc.).
- Leaning or sitting on the open door of the dishwasher could cause it to tip over.
- When moving, do not lift the dishwasher by the door; during the transport, never lean the door on the trolley. We recommend two people lift the machine.
- The dishwasher is designed for normal kitchen utensils. Objects that have been contamined by petrol, paint, traces of steel or iron, corrosive chemicals, acids or alkalis must not be washed in the dishwasher.
- If there is a water softening device installed in the home there is no need to add salt to the water softener fitted in the dishwasher.
- If the appliance breaks down or stops working properly, switch it off, turn off the water supply and do not tamper with it. Repair work should only be carried out by an approved service agent and only genuine spare parts should be fitted. Any failure to follow the above advice may have serious consequences for the safety of the appliance.
- If you need to move the machine after removing the packaging, do not try to lift it by the bottom of the door. Open the door slightly and lift the machine by holding it on the top.

By CE marking this product, we confirm, under our own responsibility, full compliance of this product with all relevant safety, health and environmental requirements under European legislation.

WARNING:
Knives and other utensils with sharp points must be loaded in the basket with their points down or placed in a horizontal position.

Installation

- Remove all elements of the packaging.

WARNING:
Keep packaging materials away from children.

- Do not install or use the dishwasher if it is damaged.

- Follow the instructions supplied with the product.

WARNING:
(only built-in and semi-integrated models)
Do not connect the dishwasher to the mains supply until all installation operations have been performed according to the "TECHNICAL NOTES FOR INSTALLATION" supplied with the product.

WARNING:
(only built-in and half integrated models)
Do not connect the dishwasher to the mains supply until the front panel has been fully installed. Otherwise, the risk of an electrical hazard may persist.

WARNING:
(only freestanding models)
If it is necessary to remove the worktop to install the dishwasher in a compartment of a modular kitchen, please contact our Authorized Technical Assistance Centres.

WARNING:
Ensure that the product, before being switched on for the first time, is installed in a horizontal position by way of the adjustable feet.
Check the horizontal position using a spirit level

Replacement of the inlet hose

- In case of breakage, the hose must be replaced with an original spare part available from the manufacturer or its service center.

WARNING:
Use only the inlet hose supplied with the appliance for connection to the water mains. Old inlet hoses must not be reused.

2. WATER CONNECTION

The appliance must be connected to the water mains using new hose-sets. The old hose-sets should not be reused.

- The inlet and drain hoses can be directed to left or right.

The dishwasher can be connected to either cold or hot water, as long as it is no hotter than 60°C.

- Water pressure must be between 0,08 MPa and 1 MPa.
- The inlet hose must be connected to a tap so that the water supply can be cut off when the machine is not in use **(fig.1).**
- The dishwasher is fitted with 3/4" threaded connector **(fig.2)**.
- Connect inlet hose **"A"** to water tap **"B"** with a 3/4" attachment making sure that it has been properly tightened.
- If it is necessary, the inlet pipe can be lengthened up to 2,5 m. The extension pipe is available from the After Sales Service Centre.
- If the dishwasher is connected to new pipes or to pipes which have not been inuse for a long time run water through for a few minutes before connecting the inlet hose. In this way no deposits of sand or rust will clog up the water inflow filter.

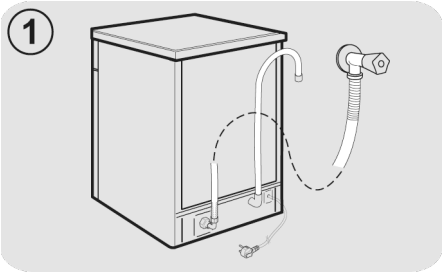

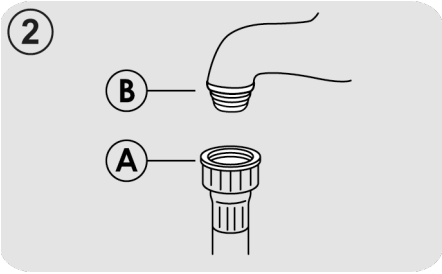

Hydraulic safety devices

All the dishwashers are equipped with an overflow safety device which, if water exceeds normal levels due to malfunctions, automatically blocks water flow and/or drains excess quantities.

SOME MODELS may include one or more of the following features:

- **WATERBLOCK (fig.3)**
  The waterblock system has been designed to improve the safety of your appliance. The system prevents flooding which might be caused by a machine malfunction or as a result of a fracture on the rubber pipes and in particular on the water supply pipe.

How it works
A sump located on the base of the appliance collects any possible water leakage and operates a sensor which activates a valve placed under the water tap and blocks any water, even with the tap fully opened.
If **box "A"** containing the electrical parts is damaged, remove the plug from the socket immediately. To ensure perfect operation of the safety system, the hose with box **"A"** should be connected to the tap as shown in the **figure**. The water supply hose should **not** be cut, as it contains live parts. If the hose is not long enough for correct connection, it must be replaced with a longer one. The hose can be obtained from the Technical Assistance Centre.

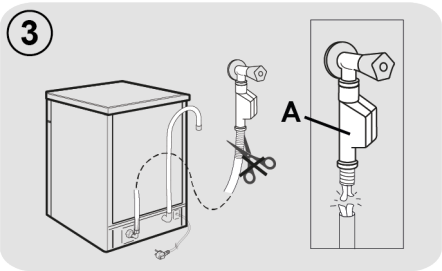

- **AQUASTOP (fig.4):**
  A device located on the supply tube that stops water flow if the tube deteriorates; in this case, a red mark will appear in the window **"B"** and the tube must be replaced. To unscrew the nut, press the one-way lock device **"C"**.

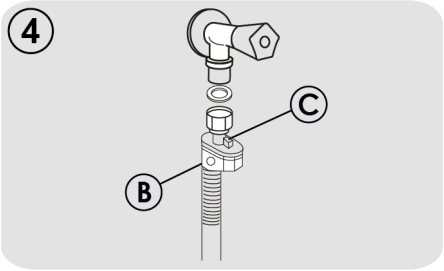

EN

Connecting the outlet hose

- The outlet hose should disharge into a standpipe, making sure that there are no kinks **(fig.5)**.
- The standpipe must be at least 40 cm above floor level and it must have an internal diameter of at least 4 cm.
- It is advisable to fit an anti-odour air trap **(fig.5X)**. If necessary the outlet hose can be extended up to 2,5 m, provided that it is kept at a maximum height of 85 cm above floor level. The extension pipe is available from the After Sales Service Centre.
- The hose can be hooked over the side of the sink, but it must not be immersed in water, in order to prevent water from being syphoned back to the machine when this is in operation **(fig.5Y)**.
- When installing the appliance under a worktop the hose pipe clamp must be attached to the wall in the highest possible position under the worktop **(fig.5Z)**.
- Check that there are no kinks in the inlet and outlet hoses.

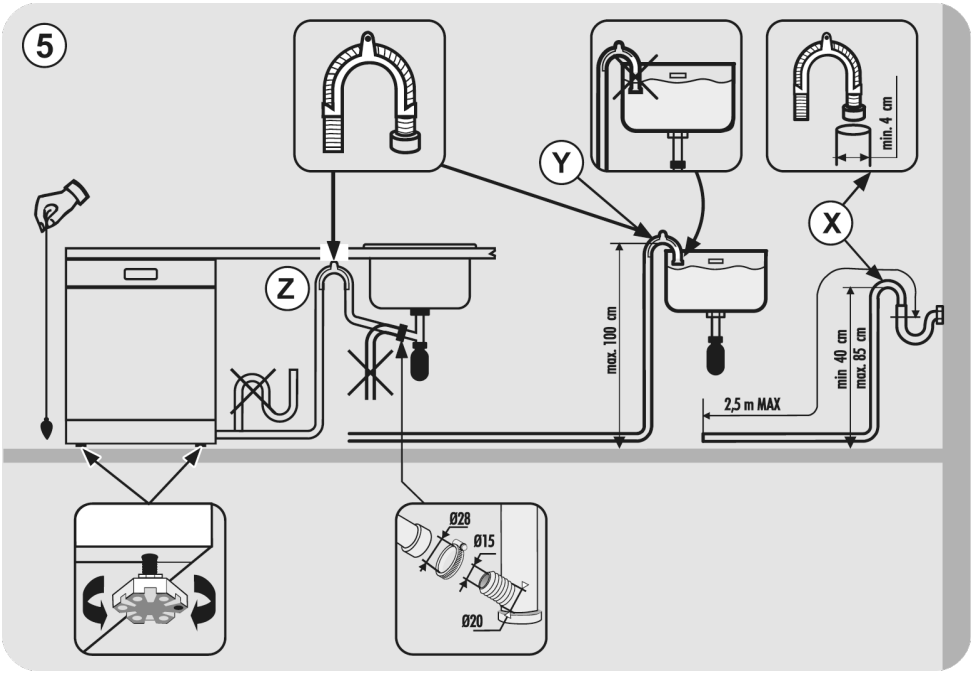

3. LOADING THE SALT

(Fig. A "1")

- The appearance of white stains on dishes is generally a warning sign that the salt container needs filling.

- On the bottom of the machine there is a container for the salt for regenerating the softener.

- It is important to use only a salt that is specifically designed for dishwasher. Other types of salt contain small quantities of insoluble particles which over a long period of time may affect and deteriorate the softener performance.

- To add salt, unscrew the cap of the container on the bottom and then refill the container.

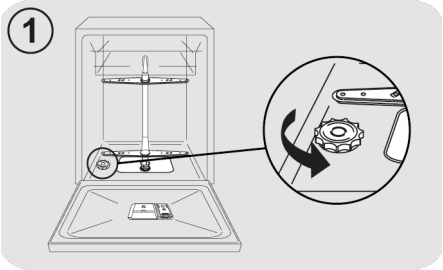

- During this operation a little water will overflow; but keep adding salt until the container is full. When the container is full, clean the thread of salt residue and retighten the tap.

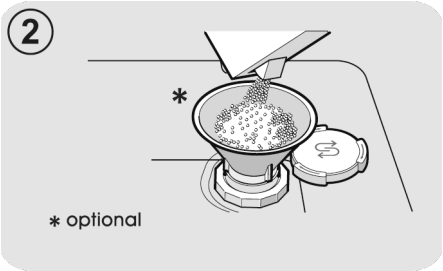

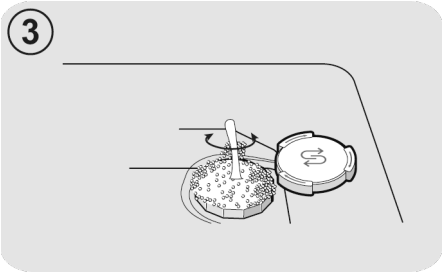

- After loading the salt, it is recommended running a complete washing cycle, or COLD RINSE programme.

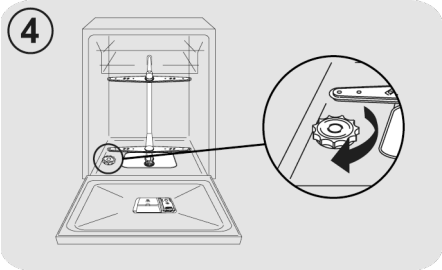

After loading the salt, YOU MUST run a complete washing cycle, or the PRE-WASH/COLD RINSE/REFRESH programme.

- The salt dispenser has a capacity of between 1 kg and, for efficient use of the appliance, it should be refilled from time to time .

(Only for first start up) When the appliance is used for the first time, after completely filling the salt container, it is necessary to add water until the container overflows.

4. ADJUSTING THE UPPER BASKET (ONLY ON SOME MODELS)

Type "A":

1. Turn front blocks **"A"** outwards;
2. Remove the basket and remount it in the upper position;
3. Replace blocks **"A"** in the original position.

Following this operation, the movable supports cannot be used in the upper position.

Type "A"

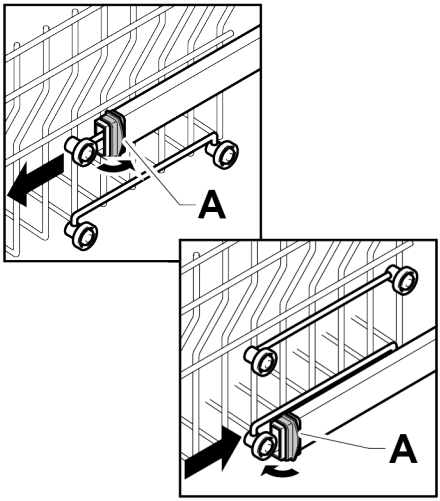

Type "B": (ONLY MODELS WITH EASY CLICK)

The upper basket is equipped with a height adjustment system.

During the first start-up, the upper basket may be in the upper or lower position. Place the basket in the upper or lower position, as appropriate for the requirements of the load, following the instructions provided.

To lift it: lift the basket holding it by the sides, as soon as it is in a raised position, let it go without applying any pressure to the levers.

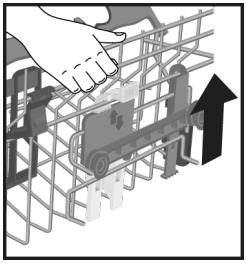

To lower it: hold the basket by the sides, press the two **B** levers on the sides of the basket, and lower it.

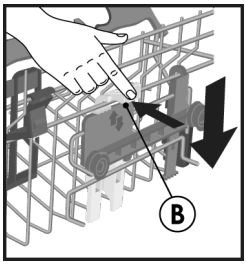

WARNING:
We recommend adjusting the basket before loading the dishes.

WARNING:
Always accompany the basket during its descent into the stop position.

WARNING:
Never raise or lower the basket by working on one side only.

5. LOADING DISHES

Using the upper basket

Cup Holder
(only on some models)

The upper basket **(fig.1)** is equipped with movable supports hooked to the side panel. They can either be placed in the open position **(A)** to place tea cups, coffee, long knives and ladles or in the lowered position **(B)** to have more space in the upper basket.

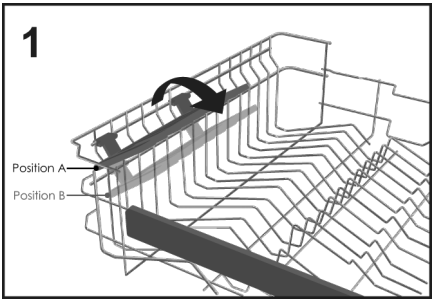

- Goblet-shaped glasses can be hung on the ends of the supports themselves. **(fig.2)**.

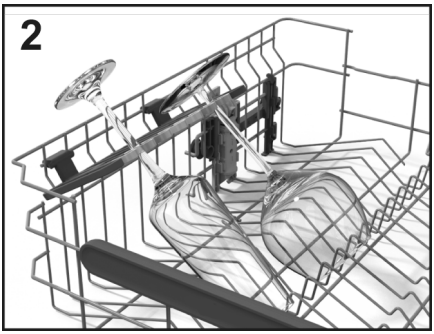

Using the upper basket

- The upper basket has been designed to offer maximum flexibility of use. It can be loaded with dessert plates, cups and glasses, which it is advisable to lock to avoid to avoid them being overturned by the jets.
- Position the larger plates, slightly inclined towards the front in order to facilitate the easy insertion of the basket inside the machine.

⚠ WARNING:
After loading the basket make sure that the spray arm rotates freely without hitting dishes or kitchen utensils.

A standard daily load is represented in **fig.3**

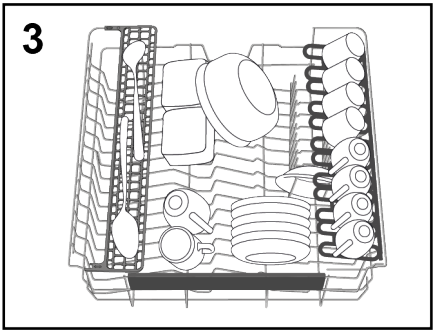

"Maxi-Ladle"
(only on some models)

This accessory **(fig.4)**, has been designed to provide the optimal washing position for all long kitchen objects or tools such as bread knives, ladles, and forks

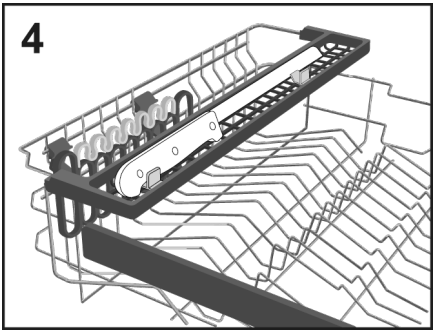

Using the lower basket

- The lower basket houses pots, pans, tureens, salad bowls, lids, serving plates, dinner plates, and soup plates.

- The cutlery should be placed with the handle down, in the special plastic container positioned in the lower basket **(fig.11-12)** making sure that the cutlery itself does not prevent the rotation of the spray arm or the opening of the detergent compartment.

Foldable racks
(only on some models)

In the lower basket **(fig.5)**, there may be some adjustable combs **(C-D-E depending on the model) useful to guarantee optimum stability for the dishes.**

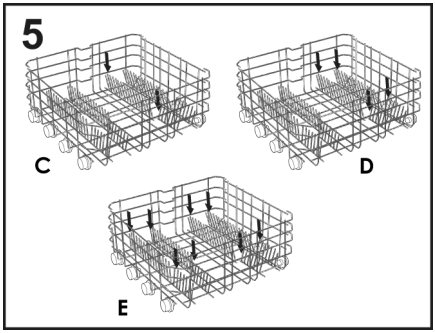

Non-standard size or shaped dishes or plates can be raised/lowered **(fig. 6 and fig. 7)** to ensure maximum loading flexibility.

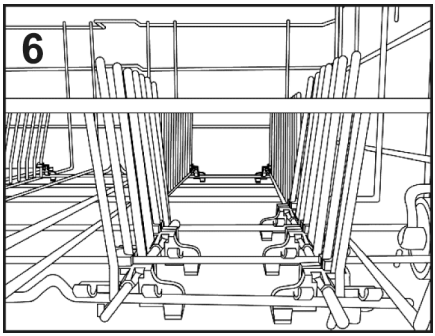

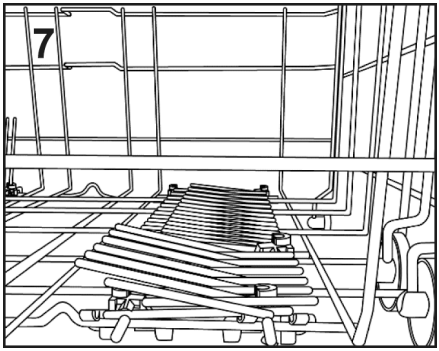

A standard daily load is represented in **fig.8**.

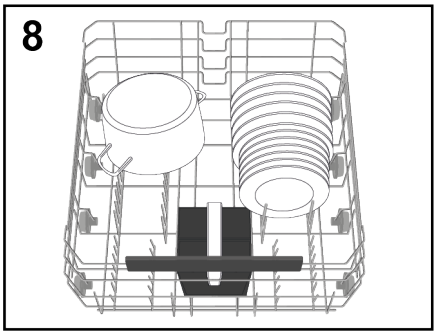

The rational and correct arrangement of the dishes is an essential condition for a good washing result.

Maxi Tray
(only on some models)

This accessory has been designed to provide the optimal washing position for oven trays and pans. Just extract the supports **(E)** located on the lower basket and place the kitchen accessories on them **(fig.9)**.

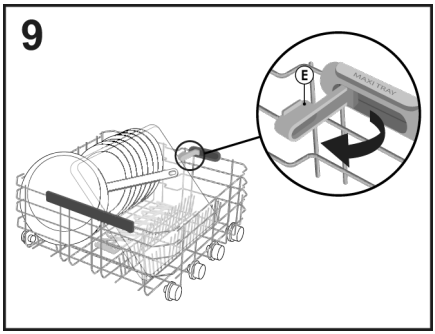

Maxi Plates
(only on some models)
The **Maxi Plates** system **(fig.10)** has been designed to provide the optimal washing position thanks to two special supports for up to 8 8 larger-than-standard size plates, up to a diameter of 34.5cm (for example pizza dishes).

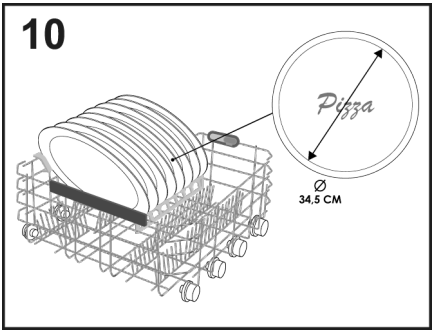

WARNING:
After loading the basket make sure that the spray arm rotates freely without hitting dishes or kitchen utensils.

Cutlery basket (only on some models)

The cutlery basket is intended to contain cutlery of all kinds, excluding those of such length as to interfere with the upper sprinkler. The cutlery must be placed in the appropriate spaces of the upper grids to allow for optimal water passage. It is possible to remove the upper grids by lifting them and sliding them inside their seat **(fig.11)**.

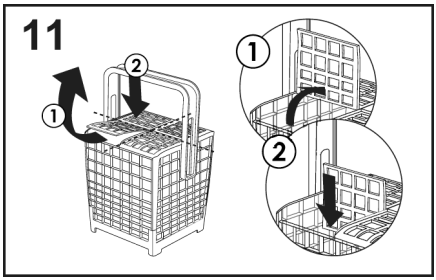

You can adjust the height of the cutlery basket handle by pulling or pushing the handle **(fig.12)**.

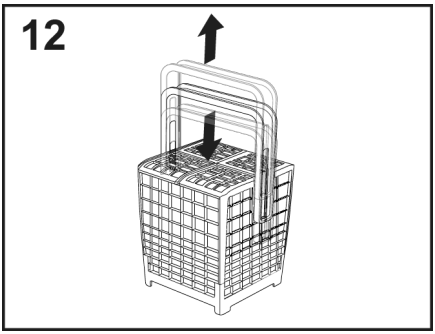

An example of the positioning of the cutlery rack is shown in **figure 8**.

WARNING:
Knives and other utensils with sharp points must be loaded in the basket with their points down or placed in a horizontal position.

Using the third basket (only on some models)

Use the third basket to load the cutlery, as shown in the image **(fig.13).**
Load knives with the sharp, cutting side facing downwards.

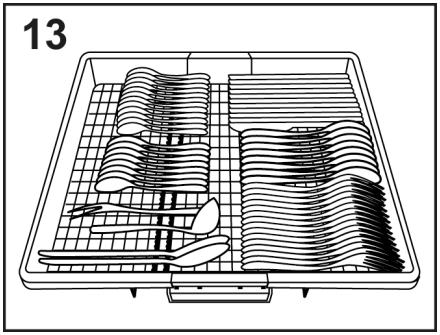

If necessary, the side shelves of the third basket can be slid or removed **(fig.14-15)** in order to create additional space in the upper basket for bulky items such as wine crystals.

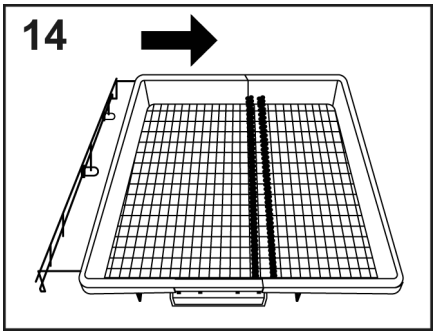

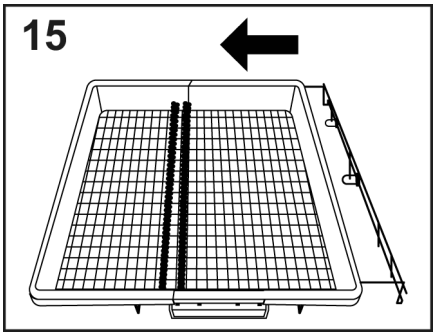

POWER WASH (only on some models)

In some programmes (see table of programmes), the third washing arm, positioned at the bottom of the dishwasher **POWER WASH**, will also be enabled.
This feature is ideal when cleaning heavily soiled tableware or cookware, placing them directly in the area of the basket above the **POWER WASH** arm.

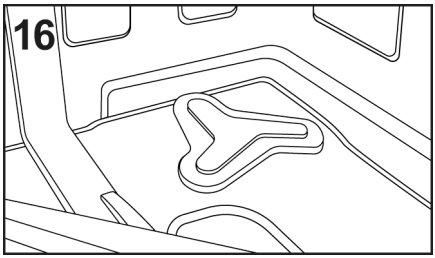

6. INFORMATION FOR TEST LABORATORIES

Please ask information required for comparison testing and measuring noise levels, according to EN normative, to the following address:

testinfo-dishwasher@candy.it

In the request, please specify model name and number of the dishwasher (see rating plate).

7. LOADING THE DETERGENT

(Fig. A "2")

The detergent

It is essential to use a detergent that is specifically designed for dishwashers either in powder, liquid,gel or tablet form.

Unsuitable detergents (like those for washing up by hand) do not contain the proper ingredients for use in a dishwasher, and stop the dishwasher from working correctly.

Filling the detergent container

The detergent container is inside the door **(fig. A "2")**. If container door is closed, to open it simply press the release button **(A)**: the door is always open at the end of any wash programme ready for the next use.

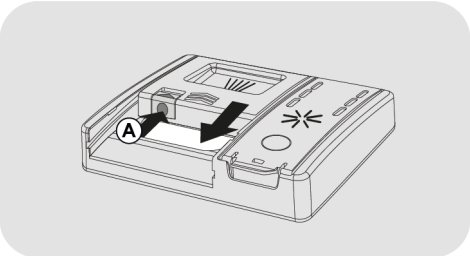

WARNING

When loading the lower basket, please ensure that the plates or others do not obstruct the detergent dispenser.

The amount of detergent to be used varies according to how dirty the dishes are and on the type of dishes to be washed. We advise using 20:30 g of detergent in the wash section of detergent compartment **(B)**.

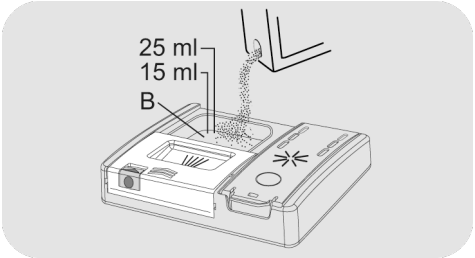

If you are using tablets, one should suffice. Insert the TABLETS, making sure that they do not interfere with the opening system.

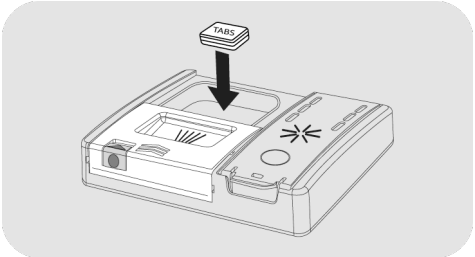

After pouring the detergent into the container, close the door again, pushing in the direction of the arrow until it clicks into place.

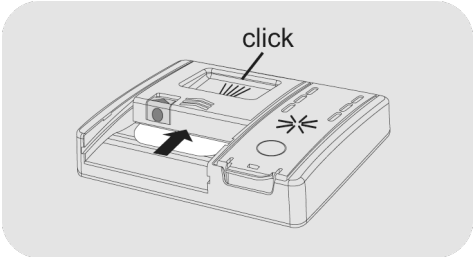

Since not all detergents are the same the instructions on the boxes of detergent can vary. We should just like to remind users that too little detergent does not clean the dishes properly whilst too much detergent will not produce better results and is also a waste.

Do not use an excessive amount of detergent and help limit damage to the environment at the same time.

EN

Loading pre-wash detergent in programmes that require it

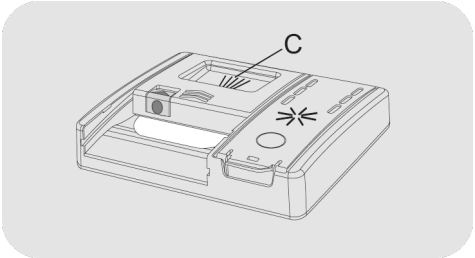

In programmes that have a pre-wash cycle that requires an additional dose of detergent (see the washing programmes chapter), the additional detergent must be poured into the appropriate location **(C)**.

8. TYPES OF DETERGENT

Detergent tablets

Detergent tablets of different manufacturers dissolve at different speeds, for this reason, during short programmes, some detergent tablets may be not fully effective, because they are not completely dissolved. If these products are used, is recommended to choose longer programmes to guarantee the complete use of the detergent.

To get satisfactory washing results, the tablets MUST be placed in the wash section of the detergent container and NOT directly in the tub.

Concentrated detergents

The concentrated detergents, with reduced alkalinity and with natural enzymes, in conjunction with 50°C wash programmes, have a smaller impact on the environment and they protect the dishes and the dishwasher. The 50°C wash programmes purposely exploit the dirt-dissolving properties of the enzymes, allowing therefore, with the use of the concentrated detergents, to achieve the same results of the 65°C programmes but at a lower temperature.

Combined detergents

The detergents that also contain the rinse aid must be placed in the wash section of the detergent container. The rinse aid container must be empty (if it is not empty, set the rinse aid regulator to lowest position before using combined detergents).

"TABLETS" combined detergents

If you are planning to use **"TABLETS"** (“3 in 1 “/ “4 in 1”/ “5 in 1”, etc.) combined detergents i.e. those with built in salt and/or rinse agent, we would advise the following:

- read carefully and follow the manufacturer’s instructions given on the packaging;
- the effectiveness of detergents containing the built in water softener/salt depends on the hardness of your water supply. Check that the hardness of your water supply is within the effective range given on the detergent packaging.

If when using this type of product, you don't get satisfactory washing results, please contact the detergent manufacturer.

In certain circumstances use of combined detergents can cause:

- limescale deposits on dishes or in the dishwasher;
- a reduction in washing and drying performance.

Any problems which arise as a direct result of the use of these products are not covered by our warranty.

Please note that using the "TABLETS" combined detergents, the rinse aid and salt indicator lights (only used on selected models) are superfluous, so you must ignore the lights.

If washing and/or drying problems occur, we recommend you return to use traditional separate products (salt, detergent and rinse agent). This will ensure that the water softener in the dishwasher operates correctly.

In this case, we recommends that you:

- refill both the salt and rinse aid container;
- run one normal washing cycle without a load.

Please note that on return to the use of conventional salt, a number of cycles will be required before the system becomes fully efficient again.

9. LOADING THE RINSE AID

(Fig. A "3")

Rinse aid

Rinse aid, which is automatically released during the last rinsing cycle, helps the dishes to dry quickly and prevents spots and stains forming.

Filling the rinse aid container

The rinse aid container is next to the detergent container **(fig.A "3").**

To open, press the tab on the lid of the rinse aid dispenser and lift it.

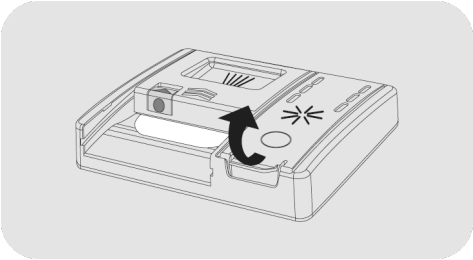

Add rinse aid up to the Max. indication.

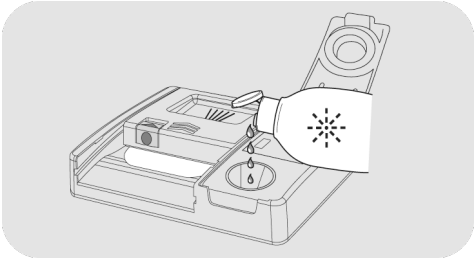

- If the rinse aid spills out, remove it from the wash tank.
- Spilled rinse aid can cause excessive frothing during the wash cycle.
- Close the lid of the rinse aid dispenser.
- The lid clicks into the locking position.

Always use rinse additives that are suitable for automatic dishwashers.

Models equipped with display or rinse aid indicator (only on some models)

When it becomes necessary to fill the rinse aid container, the display will indicate the lack of rinse aid (in models with display), or the designated indicator light on the dashboard will turn on.

This has been factory-set to level 4, as this satisfies the majority of users.

Adjusting the amount of rinse aid

ALWAYS start the procedure with the dishwasher turned off.

1. Switch the appliance on, press **ON/OFF"** button.
2. Hold the **"SETTINGS** 5" **(5Sec.)"** button, a short beep will sound.
3. The **"SETTINGS"** message appears on the display.
4. Press the **"PROGRAMME SELECTION"** <P P> buttons to navigate the submenu.
5. Choose the **"RINSE AID"** option.
6. Press **"START/RESET"** reset 3" to access the regulation levels.
7. Press **"PROGRAMME SELECTION"** <P P> to choose the value (R1.....R6). With level R0, no rinse aid is dispensed.
8. Press **"START/RESET"** reset 3" to confirm.
9. Press **"ON/OFF"** to confirm.

The limestone content of the water considerably affects the formation of limescale and the drying performance.
It is therefore important to regulate the quantity of rinse aid to achieve good washing results.
If, after the wash, there are streaks on the dishes, decrease the amount by one position. If whitish spots occur, increase the amount by one position.

The limestone content of the water considerably affects the formation of limescale and the drying performance.
It is therefore important to regulate the quantity of rinse aid to achieve good washing results.
If, after the wash, there are streaks on the dishes, decrease the amount by one position. If whitish spots occur, increase the amount by one position.

Models not equipped with rinse aid indicator (only on some models):

You can check the rinse aid level by means of the optical display **(B)** on the dispensing container.

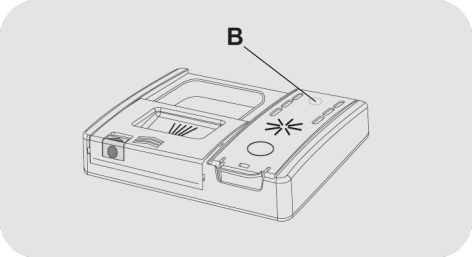

FULL

dark

EMPTY

light

Adjusting the amount of rinse aid.

It is only possible to adjust the amount of rinse aid used by the dishwasher via a special APP that can be downloaded from the site with your smartphone.

The adjustment has been factory-set at level 2 as this satisfies the majority of users.

10. CLEANING THE FILTERS

(Fig. A "4")

The filter system consists of:

- A central **container** that traps the larger particles;
- A **micro filter**, located beneath the gauze, that traps the tiniest particles ensuring a perfect rinse;
- A **flat gauze** that continuously filters the wash water.

- To achieve excellent results every time, the filters should be checked and cleaned after each wash.
- To remove the filter unit, simply turn the handle anti-clockwise ① and extract it by pulling it upwards ② **(fig.1)**.

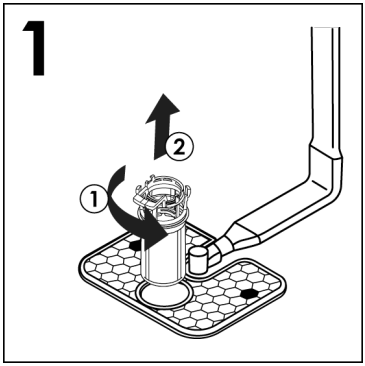

- For ease of cleaning, the central container is removable **(fig.2)** by pressing the two buttons on the sides and pulling it upwards.

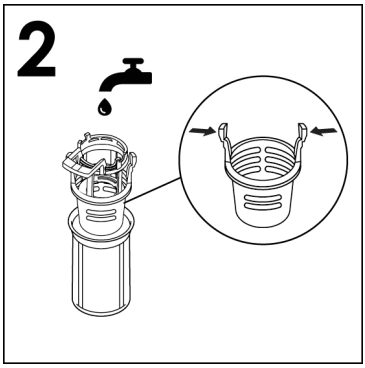

- Remove the gauze filter **(fig.3)** and wash the whole unit under a jet of water **(fig.4)**. If necessary a small brush can be used.

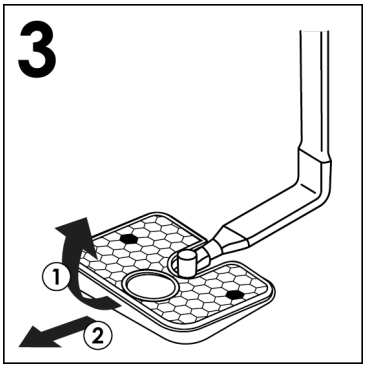

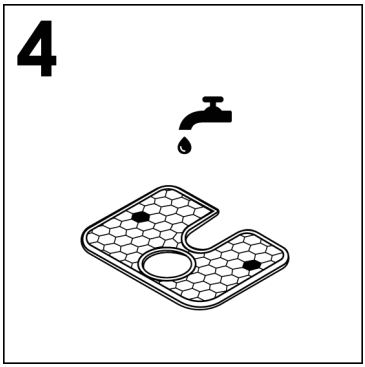

- Re-assemble the plate and filter unit by following the previous operations in reverse order, taking care to screw the components back correctly, so as not to jeopardise the operation of the dishwasher.

- With the **Self-cleaning Micro filter**, maintenance is reduced and the filter unit need only be checked every two weeks. Nevertheless, after each wash it is advisable to check that the central container and the gauze filter are not clogged.

WARNING

After cleaning the filters, make sure that they are correctly reassembled and that the gauze filter is properly positioned at the bottom of the dishwasher. Make sure that the filter is screwed back, clockwise, into the gauze, as poor seating of the filter unit could have an adverse effect on the efficiency of the appliance.

Never use the dishwasher without the filters.

11. PRACTICAL HINTS

How to get really good wash results.

- Before placing the dishes in the dishwasher, remove any remaining food (bones, shells, pieces of meat or vegetables, coffee grounds, skin of fruit, cigarette ash, thooth picks etc. to avoid blocking the filters, water outlet and washing arm nozzles.
- There is no need to rinse the dishes before loading them into the dishwasher, as this leads to increased water and energy consumption and is not recommended.
- If saucepans and oven dishes are encrusted with the remains of burnt or roast food, it is advisable to leave them to soak before washing.
- Place the dishes face downwards.
- Try to place the dishes in such a way that they are not touching one another. If they are loaded properly you will get better results.
- After loading the dishes check that the washing arms can rotate freely.
- Pans and other dishes that have particularly stubborn food particles or remnants of burnt food should be left to soak in water with dishwasher detergent.
- To wash silver properly:

  a) rinse the silver immediately after use, especially if it has been used for mayonnaise, eggs, fish etc.;

  b) do not sprinkle detergent onto it;

  c) keep it separate from other metals.

How to make savings.

Tips on how to save money and not damage the environment when using your appliance.

- Achieve the best use of energy, water, detergent and time by using the recommended maximum load size. Save up to 50% energy by washing a full load instead of 2 half loads.
- If you want the dishwasher to give a complete wash, place the dishes in the dishwasher at the end of each meal and if necessary turn on the COLD RINSE cycle to soften the food remains and remove bigger particles of food from the new load of dishes. When the dishwasher is full start the complete wash cycle programme.
- If the dishes are not very dirty or if the baskets are not very full select an ECONOMY programme, following the instructions in the program list.
- The most efficient programmes in terms of combined use of water and energy are usually the longer-lasting ones with lower temperature.
- Washing in a dishwasher uses less energy and water compared to hand washing if the dishwasher is used following the manufacturer's instructions and advice.

What not to wash.

- It should be remembered that not all dishes are suitable for washing in a dishwasher. We advise against using the dishwasher to wash items in thermoplastic, cutlery with wooden or plastic handles, saucepans with wooden handles, items in aluminum, crystal leaded glass unless otherwise stated.
- Certain decorations may fade. It is therefore a good idea before loading the whole batch to wash just one of the items first so as to be sure that others like it will not fade.

- It is a good idea not to put silver cutlery with non-stainless steel handles into the dishwasher as there could be a chemical reaction between them.

When buying new crockery or cutlery always make sure that they are suitable for washing in a dishwasher.

Useful hints

- In order to avoid any dripping from the top rack, remove the lower rack first.
- If the dishes are to be left in the machine for some time, leave the door ajar, to let some air circulate and to improve the drying performance.

12. CLEANING AND MAINTENANCE

Looking after your appliance correctly can extend its lifespan.

Cleaning the appliance's exterior

- Disconnect the machine from the power supply.
- To clean the dishwasher outside, do not use solvents (degreasing action) neither abrasives, but only a cloth soaked with water.

Cleaning the appliance's interior

- The dishwasher does not require special maintenance, because the tank is self-cleaning.
- Regularly wipe the door gasket with a damp cloth to remove any food remains or rinse aid.
- Dishwasher cleaning is recommended, in order to remove limestone deposits or dirt. We suggest you run a washing cycle periodically with specialist dishwasher cleaning products. For all cleaning operations the dishwasher must be empty.
- If, in spite of the routine cleaning of the filters, you notice that the dishes or pans are not properly washed or rinsed, check that all the spray heads on the rotor arms **(fig. A "5")** are clear.

If they are blocked, clean them in the following way:

1) remove the upper rotor arm, turning the ring nut from the right to the left **(fig.1).**

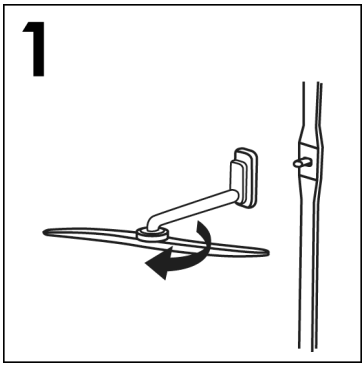

2) The lower rotor arm can be extracted by simply pulling it upwards **(fig.2).**

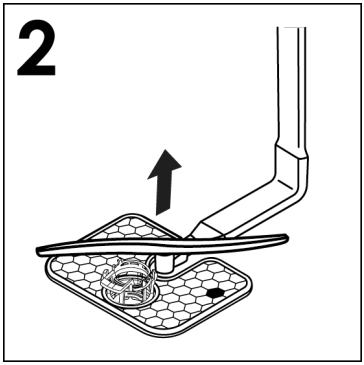

3) wash the rotor arms under a jet of water to clear any blockage in the spray heads **(fig.3).**

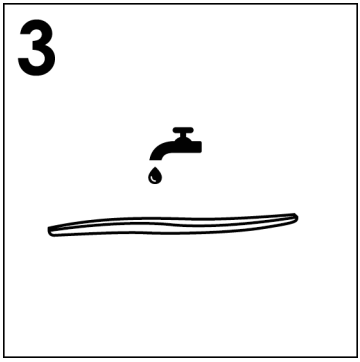

Do not use tools that can deform the spray heads.

4) when you have finished, refit the rotor arms in the same position, remembering to re-align the arrow and screw into position **(fig.4).**

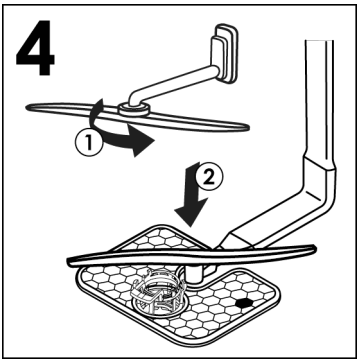

5) Both the door lining and the tank lining are in stainless steel; however, should spots caused by oxidation occur, this is probably due to a high level of iron salts presents in the water.

6) The spots can be removed with a mild abrasive agent; never use chlorine based materials, steel wool, etc.

WHEN CYCLE IS FINISHED.

After every wash it is essential to turn off water supply and to switch off the machine by pressing the On/Off button to the off position.

If the machine is not going to be used for some time, it is advisable to follow these rules:

1. do an empty wash with detergent in order to clean the machine of any deposits;
2. pull out the electric plug;
3. turn off the water tap;
4. fill the rinse aid container;
5. leave the door ajar;
6. keep the inside of the machine clean;
7. If the machine is left in places where the temperature is below 0°C any water left inside the pipes may freeze. Wait until the temperature rises above zero and then wait for about 24 hours before.

13. DESCRIPTION OF THE CONTROL PANEL

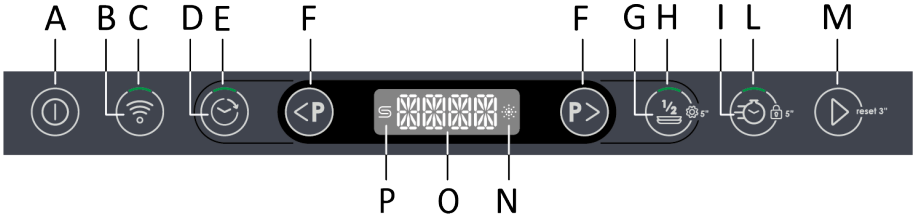

A ON/OFF Button

B ENROLMENT Wi-Fi button

C ENROLMENT Wi-Fi light

D DELAY START button

E DELAY START light

F PROGRAMME SELECTION button

G HALF LOAD/SETTING button

H HALF LOAD light

I EXPRESS/CHILD LOCK button

L EXPRESS light

M START/RESET button

N TABLETS light

O DISPLAY

P ADDISH light

14. TECHNICAL DATA

SIZE

DATA	FREE-STANDING		BUILT-IN	
	WITH WORKTOP	WITHOUT WORKTOP	HALF-INTEGRATED	FULL-INTEGRATED
Width x Height x Depth (cm)	60x85x60.9	59,8x82x58	59,8x81,8 ÷ 89,8x57	59,8x81,8 ÷ 89,8x55
Depth with door open (cm)	120	117	117	117

TECHNICAL DATA (See rating plate)

Place settings (EN 50242)	**12**	**13**	**14**	**15**	**16**
Capacity with pans and dishes	8 people	8 people	9 people	9 people	9 people
Water supply pressure (MPa)	Min. 0,08 – Max. 1				
Fuse / Power input / Supply voltage	See rating plate				

15. PROGRAMME SELECTION AND SPECIAL FEATURES

ON/OFF button ⏻

- To turn the appliance on and off, press the **ON/OFF** ⏻ button.

First time you switch on the appliance

- Connect the machine to the power supply.
- Press the **"ON/OFF"** ⏻ button.

In this phase, only the "PROGRAMME SELECTION" and "START/RESET" buttons will remain active.

- The **"SET LANGUAGE"** message will appear on the display, followed by **"ENGLISH"**.
- By pressing the **"PROGRAM SELECTION"** <P P> button you can select the preferred language.
- To accept the choice of language, press the **"START/RESET"** button. Immediately after, the **"WELCOME"** message will appear on the display. just once and the lights will all be off.
- The pre-set **"ECO"** programme will appear on the display.
- To adapt the wash cycle to the type of dirty dishes, choose the suitable programme by selecting the two **"PROGRAM SELECTION"** <P P> buttons.
- Select the washing options if necessary.
- Press the **"START/RESET"** button.

WARNING:

In the event that the machine remains switched on without selecting or starting any programme, the dishwasher will switch off automatically after 5 minutes.

Next time you switch on the appliance

Hold down the **ON/OFF** button to turn the machine on and the **"ECO"** programme, or the programme you have decided to use, will appear on the display, saving it when the dishwasher is switched on. (To save the programme, see the “SETTINGS menu” in the specific paragraph **"MEMO FUNCTION"**).

"AUTOMATIC" programmes

Models with Smart Loading Sensor
The **"AUTO WASH"** programme, automatically sets the ideal temperature and washing time, optimising water and electricity consumption, thanks to an algorithm that analyses the degree of dirtiness of the dishes in real time.

Models with dirt sensor (only on some models).
The dishwasher is equipped with a dirt sensor, capable of analysing water murkiness during all ***"AUTOMATIC" programme phases (see programme list)***. This device automatically adapts the wash cycle parameters to the actual quantity of dirt on the dishes, since water murkiness is linked to the quantity of dirt on the dishes. Thus, excellent washing results are guaranteed while optimising water and energy consumption.

"IMPULSE"or "INTERMITTENCE" programmes (only on some models)

Some programmes use an impulse or intermittent washing system (depending on the model) which reduces consumption, noise and improves performance.

The "intermittent" working of the washing pump is NOT to be considered a malfunction; it is a characteristic of impulse washing, and therefore should be considered a normal feature of the programme.

ADDISH option to add dishes after the programme has started)

When the programme starts, you should only open the door and add more dishes when the **ADDISH** indicator light is switched on. The appliance will stop automatically and the time remaining to the end of the cycle will flash on the display. Close the door, ***without pressing any buttons***.

Open the door slowly and carefully, to avoid getting splashed by washing water.

Adding dishes after the ADDISH indicator light has switched off is strongly discouraged as this could affect the wash performance.

WARNING:

If you open the door during the drying cycle, an intermittent audio signal advises you that the drying cycle has not yet finished.

Interrupting a programme

Opening the door when a programme is running is not recommended especially during the main wash and final hot rinse phases. However, if the door is opened while a programme is running (for example, to add dishes) the machine stops automatically. Close the door, **without pressing any buttons**. The cycle will restart from where it left off.

WARNING:

If you open the door during the drying cycle, an intermittent audio signal advises you that the drying cycle has not yet finished.

Changing a running programme

If you want to cancel and change a programme that is already in progress, proceed as follows:

1. Press and hold the **"START/RESET"** button for at least 3 seconds.
2. The countdown appears on the display **"3 -2 -1"** while the **"RESET"** button is held down.
3. **"RESET"** will appear on the display and beeps will sound.
4. The programme in progress will be cancelled and the **"ECO"** programme, or the programme you have decided to use, appears on the display, memorising it when the dishwasher is switched on.
5. At this point you can set a new programme using the **"PROGRAMME SELECTION"** keys.

WARNING:

Before starting a new programme, you should check that there is still detergent in the dispenser. If necessary, top up the detergent.

Programme operations. (only for free-standing models)

While the programme is running, the display shows the time remaining until the end of the cycle and the name of the programme set can be displayed by pressing any key except for **"START/RESET"** .

If there is any break in the power supply while the dishwasher is operating, a special memory stores the selected programme and, when the power is restored, it continues where it left off.

End of the programme

The end of the programme will be indicated by 3 signals lasting 3 seconds interspersed with a pause of 20 seconds. After one minute, the dishwasher will switch off. At the same time the "**END**" message will appear on the display for one minute.

Only for models with the SMART DOOR" option, the door will open automatically during the drying phase and you will have to wait for the end-of-cycle signal before removing the dishes.

"EXPRESS" button (only on some models)

This button enables average energy and time savings of 25% (according to the cycle selected), reducing the wash-water temperature and the drying time during the final rinse. This option is recommended for evening washing when perfectly dry dishes are not needed immediately. For better drying, leave the dishwasher door slightly ajar to promote natural air circulation in the dishwasher.

HALF LOAD/SETTING button

This key allows you to select **two** different functions:

"HALF LOAD"

"HALF LOAD" button
(Only in models where present)
Specially developed for lightly soiled small loads that fits approximately half the of the dishwasher. Selecting this option can save you time, energy and water.
After selecting the programme, press the button and the indicator light will come on.
If this option is not compatible with the set programme, a sound will be heard.

In models with the **PRO** version only, you can also choose the washing basket.

Each time the half load button is pressed, the wash basket will appear on the display.

Both baskets.

Lower basket.

Upper basket.

In models with a 3rd basket, it will always be active.

SETTINGS 5"

The dishwasher comes with certain factory settings. However, you can adapt the various parameters to your washing needs from the settings menu.
The following parameters can be adjusted **(LANGUAGE → TABS → SOFTENER → RINSE AID → BUZZER → MEMO FUNCTION → INTERIOR LIGHT*).**

***Only in models where present**

ALWAYS start the procedure with the dishwasher turned off.

LANGUAGE SETTING

1. Switch the dishwasher on with the **"ON/OFF"** button.

2. Keep the **"OPTIONS"** 5" button pressed for about 5 sec.

3. The **"SETTINGS"** message appears on the display.

4. By pressing the **"PROGRAM SELECTION"** key you can select the successive parameters to be adjusted.

5. Select the **"LANGUAGE"** setting that appears on the display.

6. Press the **"START/RESET"** button to confirm the selected parameter.

7. **"ENGLISH"** appears on the display.

8. Press the **"PROGRAM SELECTION"** buttons to choose the new language.

9. Press the **"START/RESET"** to confirm the chosen language has been set, **"LANGUAGE"** will be displayed and a short sound will be heard.

10. To exit the menu, press the **"ON/OFF"** key.

"TABLETS"

"TABLETS" OPTION SETTING
(only in models where present)
This option enables optimal tablet usage ("3 in 1"/ "4 in 1"/ "5 in 1", etc.). By pressing this button, the set washing programme is changed, in order to obtain optimum performance using tablets or combined detergents; in addition, the salt and rinse aid indicators are deactivated.

WARNING:
Once selected, this option also remains active (light on) for subsequent washing cycles and can only be de-activated (light off) by deselecting the option.

This option is recommended when using the RAPID programme, whose duration will be extended to enable improved performance from the detergent tablets.

1. Switch on the dishwasher with the **"ON/OFF"** button.

2. Keep the **"OPTIONS"** 5" button pressed for about 5 sec.

3. The **"SETTINGS"** message appears on the display.

4. By pressing the **"PROGRAM SELECTION"** key you can select the successive parameters to be adjusted.

5. Select the **"TABLETS"** setting.

6. Press the **"START/RESET"** button to confirm the selected parameter.

7. Press the **"PROGRAM SELECTION"** buttons to choose the two settings:
   - **"YES"**
   - **"NO"**

8. Confirm your choice by pressing **"START/RESET"**.

- If the **"YES"** setting is confirmed, **"TABLETS"** will appear on the display, which will scroll continuously and the **"TABLETS"** light will appear on the display.

- If the **"NO"** setting is confirmed, **"TABLETS"** will appear on the display and the warning light will be off.

9. To exit the menu, press the **"ON/OFF"** key.

SOFTENER
For **SOFTENER** settings, see the appropriate chapter.

RINSE AID
For **RINSE AID** settings, see the appropriate chapter.

BUZZER SELECTIONS AND SETTINGS
The buzzer signal that sounds upon pressing the keys used for selecting and setting washing functions and options can be activated/deactivated as follows (it is activated by default):

WARNING:
The buzzer signal will always remain active when the machine is switched on and off, at the start or end of a washing cycle or in the event of a problem or error with the machine.

1. Switch on the dishwasher with the **"ON/OFF"** button.
2. Keep the **"OPTIONS"** 5" button pressed for about 5 sec.
3. The **"SETTINGS"** message appears on the display.
4. By pressing the **"PROGRAM SELECTION"** key you can select the successive parameters to be adjusted.
5. Select the **"BUZZER"** setting.
6. Press the **"START/RESET"** button to confirm the selected parameter.
7. Press the **"PROGRAM SELECTION"** buttons to choose the two settings:
   - **"YES"**
   - **"NO"**
8. Confirm your choice by pressing **"START/RESET"**.
   - If the setting is confirmed, **"BUZZER"** will appear on the display and will scroll continuously.
9. To exit the menu, press the **"ON/OFF"** key.

MEMO FUNCTION

To enable storage of the last programme used, proceed as follows:

1. Switch on the dishwasher with the **"ON/OFF"** button.
2. Keep the **"OPTIONS"** 5" button pressed for about 5 sec.
3. The **"SETTINGS"** message appears on the display.
4. By pressing the **"PROGRAM SELECTION"** key you can select the successive parameters to be adjusted.
5. Select the **"LAST USED"** setting.
6. Press the **"PROGRAM SELECTION"** buttons to choose the two settings:
   - **"YES"**
   - **"NO"**
7. Confirm your choice by pressing **"START/RESET"**.
   - If the setting is confirmed, **"LAST USED"** will appear on the display and will scroll continuously.
8. To exit the menu, press the **"ON/OFF"** key.

EN

INTERIOR LIGHT (only on some models)

The innovative internal lighting system has been designed according to high aesthetic standards to make your dishwasher even more functional. When you load or empty the dishwasher, two powerful LED lights illuminate the inside of the dishwasher.
The lights come on as soon as the machine is turned on with the **ON/OFF** button.

After a period of 5 min. the dishwasher goes into stand-by by turning off the lights.

After the end of the cycle, to use the internal lighting again, press the **ON/OFF** button.

The light is not active when the machine is in the delayed start or pause condition.

1. Switch on the dishwasher with the **"ON/OFF"** button.
2. Keep the **"OPTIONS"** 5" button pressed for about 5 sec.
3. The **"SETTINGS"** message appears on the display.
4. By pressing the **"PROGRAMME SELECTION"** key you can select the successive parameters to be adjusted.
5. Select the **"INTERIOR LIGHT"** setting.
6. Press the **"START/RESET"** button to confirm the selected parameter.
7. Press the **"PROGRAMME SELECTION"** buttons to choose the two settings:
   - **"YES"**
   - **"NO"**
8. Confirm your choice by pressing **"START/RESET"**.

- If the **"YES"** setting is confirmed, **"INTERIOR LIGHT"** will appear on the display, which will scroll continuously.
- If the **"NO"** setting is confirmed, **"INTERIOR LIGHT"** will appear on the display.

9. To exit the menu, press the **"ON/OFF"** key.

FLOOR LIGHT (only in models where present)

While the washing program is running, a floor light is projected onto the floor under the dishwasher door. When the wash cycles are started, the light stays on until the end of the wash cycle. To indicate the end of the wash cycle, the floor light is activated intermittently for 10 sec.

The light is not active when the machine is in the delayed start or pause condition.

The indication will not be visible if the plinth panel is positioned forward or if something is placed in front of the information projector.

HYGIENE + button (only on some models)

This option allows you to increase the temperature and modify some parameters of the washing cycle so the interior of the machine can be effectively sanitized.

SMART DOOR button (only on some models)

This option activates a special device that opens the door a few centimetres during or at the end of the drying cycle (depending on the programmes), favouring a more natural and efficient drying of the dishes. The duration of the selected cycle will be automatically modified, to allow the rinsing temperatures to be optimised, providing a significant reduction in energy consumption. Opening the door in the last stage of drying enables air to be recirculated, eliminating the risk of unpleasant odours.

When the door opens, the **"SMART DOOR"** message will appear on the display.

This option will automatically be active in the "ECO" programme. There is however the option to deactivate it.

WARNING:

With this option selected, you must not in any way prevent the door from opening or force it to close, so as not to damage the mechanism. Leave the space in front of the door free and before closing it, wait for the opening device to reactivate.

CHILD LOCK button 5"

CHILD LOCK ACTIVATION

The dishwasher is equipped with an electronic child lock. Child protection disables commands, thereby preventing unwanted or accidental changes from being made.

Child protection can be activated or deactivated as follows:

1. Turn on the dishwasher by pressing and holding the **"ON/OFF"** button.
2. Press the **"CHILD LOCK"** 5" button for about 5 seconds.
3. **"CHILD LOCK ON"** will appear on the display and a short beep will be heard.
4. Only the **"ON/OFF"** button will remain active.
5. Each time you press the disabled keys, **"LOCK"** will appear on the display.

CHILD LOCK DEACTIVATION

1. Press the **"CHILD LOCK"** 5" button for about 5 seconds.
2. **"LOCK OFF"** will appear on the display and a short beep will be heard.

Turning off the machine with the "ON/OFF" button, the next time the machine is switched on, the child protection will be activated.

"NO SALT" warning light

When the **"SALT"** message appears on the display or, where present, the relative light comes on, fill the tank (see chapter on **"ADDING THE SALT"**).

If the setting level of the softener is set to 0, this will never happen (see chapter on setting the softener).

"NO RINSE AID" warning light

When the **"RINSE AID"** message appears on the display or, where present, the relative light comes on, fill the tank (see chapter **"FILLING RINSE AID"**).

If the RINSE AID level is set to 0, this will never happen.

DELAY START button

Delay start selection
This button allows you to programme the start of the wash cycle, with a delay between 0:30 and 24 hours.
To set the delayed start proceed as follows:

1. Switch on the dishwasher by holding down the **"ON/OFF"** button for about 3 sec.
2. Select the washing programme.
3. Press the **"DELAY START"** button (**"0:30"** will appear on the display).
4. Press the button again to increase the delay (each time it is pressed, the delay is increased by 30 minutes, up to a delay of 4 hours, after each time the button is pressed it will increase by 1 hour up to a maximum of 24:00. Pressing the button again after a delay of 24:00 will return to 0:00 (delayed start disabled).
5. The delayed start settings will remain visible on the display for 5 seconds, or until the **ON/OFF - PROGRAM SELECTION - START/RESET** buttons are pressed.

Changing the programme does not change the delay time and the LED will remain on.

When you press the DELAY START button, the last setting made will be displayed.

Countdown and Programme start with DELAY START

- When the delay is set on a programme: after pressing **"START/RESET"** .
- The **"DELAY START"** light stays on until the end of the time.
- The delayed time countdown starts showing on the display **"START IN XX: XX"**.
- The time will be displayed with 30-minute intervals over 24 hours and one-minute intervals over the last 2 hours.
- Pressing any button (except the **"ON/ OFF, Wi-Fi Enrollment, START/RESET"** buttons for 3 seconds, the programme name **"P XX NAME"** is displayed (P + programme number + programme name) for one single scroll and then the delay time is displayed again.

In the event of a power failure or shutdown, the dishwasher stores the time remaining at the start, which will be resumed at the point where it was interrupted once the power supply is restored or the machine is switched on again.

If you want to cancel the delayed start proceed as follows:

- Press and hold the **"START/RESET"** button for at least 3 seconds. The display will show **"RESET"** and beeps will sound.
- The delayed start and the selected programme will be cancelled. Two dashes will appear on the display.
- At this point, if you want to start the dishwasher, you will need to set the desired programme again and select the option buttons if necessary.

Activation or exclusion of the DEMO MODE program: (demonstration program to be used exclusively in points of sale)

DEMO MODE ACTIVATION

ALWAYS start the procedure with the dishwasher turned off.

1. To start the **DEMO MODE**, press the **"ON/OFF"** ⏻ and **"HALF LOAD/ SETTINGS"** buttons simultaneously for 10 seconds.

2. The "**DEMO ON"** message will scroll **twice** on the display.

3. The machine is now ready for simulating various programmes and options.

Interaction with DEMO MODE

- In **"DEMO MODE"** the user can operate dishwasher as in normal operating conditions, but cannot start the programme, only the **Programmes, Options and Delay Start** are active.
  You can also turn off the dishwasher.

- If no button is pressed within 7 seconds, the dishwasher returns to **PASSIVE DEMO MODE**.

When the dishwasher is turned on and the DEMO MODE is still active, the "DEMO ON" message scrolls twice on the display to warn the user that the machine is in this mode.

EN

DEMO MODE DEACTIVATION

ALWAYS start the procedure with the dishwasher turned off.

1. To deactivate the **DEMO MODE**, press the **"ON/OFF"** ⏻ buttons and **"HALF LOAD/SETTINGS"** buttons at the same time for 10 seconds.

2. The "**DEMO OFF**" message will scroll **twice** on the display.

3. The dishwasher switches off.

4. The machine is now ready to turn on and activate in normal mode.

16. REMOTE CONTROL (WI-FI)

This appliance is equipped with **Wi-Fi** technology that allows the machine to be remote controlled via an app.

APPLIANCE PAIRING (ON APP)

- Download the **hOn** App on your device by framing the following QR code:

or by the link:
go.haier-europe.com/download-app

The *hOn* App is available for devices running both Android and iOS, both for tablets and for smartphones.

To discover all the details of the Wi-Fi features, explore the app menus in DEMO mode.

- Make sure the router is turned on and your smartphone/tablet is connected to your home **Wi-Fi** network.

The frequency of the home Wi-Fi network has to be set on the 2.4 GHz band. You can not configure the machine if your home network is set to the 5 GHz band.

- Turn the **BLUETOOTH** on your smartphone/tablet (if available).

- Open the App, create the user profile (or log-in if it is already created previously) and pairing the appliance following the instructions on the device display.

Successful pairing

- If the pairing with the app is successful, the **"Wi-Fi"** light will be on steady.

- The display will show **"CONNECTED"**, followed by **"REMOTE CONTROL ON"**.

- You can now control the dishwasher from the App.

Unsuccessful pairing

If pairing with the App fails (or 5 minutes have passed):

• The **"Wi-Fi"** indicator will turn off.

- **"TRY AGAIN"** will appear on the product display.

- The dishwasher will be not connected.

- Repeat the pairing procedure from the App.

Reset WiFi

In case of problems or change of the home router settings (e.g.: change network name/password, internet supplier, etc...) you have to perform the pairing procedure again, removing the product from the App, or changing the Wi-Fi network credentials from the appliance settings, within the App.

ENABLING REMOTE CONTROL

Whenever you want to use the dishwasher remotely:

- Make sure the router is turned on and connected to the Internet.

- Load the dishwasher, load the detergent, close the door.

- Switch on the dishwasher with the **ON/OFF** ⏻ button.

- Press the **"Wi-Fi"** button **"REMOTE CONTROL ON"** appears on the display.

- Close the door.

For built-in models, do this before turning on the product.

- It is now possible to control the dishwasher from the App.

DISABLING REMOTE CONTROL

- To exit remote control, press the **"Wi-Fi"** button on the appliance again.

- The **"Wi-Fi"** indicator will blink very slowly.

- **Without running cycle:**

  The message **"REMOTE CONTROL OFF"** appears on the product display. It will be possible to manually select a new cycle.

- **With cycle in progress:**

  The message **"REMOTE CONTROL OFF"** appears on the product display. The display will then show the remaining time. The cycle will be completed without having control from the App.

Alternative way to exit remote control.

- **Press the "START/RESET" button for 3 secs.**
  If there is a cycle under way, it will be cancelled, and the machine will exit **REMOTE CONTROL** mode.
  The **"Wi-Fi"** indicator light will flash slowly. It is now possible to set a new wash cycle from the control panel.

- **Press the "ON/OFF" button for 3 secs (or power off).**
  If there is a cycle under way, it will be paused and the machine will exit **REMOTE CONTROL** mode.
  On switching on again, the **"Wi-Fi"** indicator light will flash slowly and any cycle under way will continue from the point of interruption.

Opening the door, any REMOTE CONTROL will be disabled. To resume control from the App, close the door.

EN

"Wi-Fi" indicator light

- Indicates the connection status of the product to the home Wi-Fi network. It can be:

- **FIXED ON:** remote control enabled.

- **VERY SLOW FLASHING**: remote control disabled.

- **SLOW FLASHING**: reset of the **Wi-Fi** network (during pairing on the App).

- **FAST FLASHING**: appliance associated with the app but no **Wi-Fi** connection. Check the correct functioning of the router or the changed home **Wi-Fi** credentials (Network name and / or password). In this case, update the settings within the app, following the instructions on the smartphone.

17. PROGRAMME LEGEND

Programme			Description
P1	35'	**WASH&DRY 35’**	This programme allows you to wash & dry a limited load in only 35 minutes (freshly soiled)
P2	59'	**RAPID 59’**	This is a full load programme designed to wash and dry in less than an hour, maintaining high-quality wash performance.
P3	ECO	**ECO**	Standard and most efficient programme in terms of combined energy and water consumption for normally soiled dishes**.** **EN60436-standardized programme.**
P4		**UNIVERSAL**	Suitable for everyday light soiled dishes, your daily reference programme.
P5		**INTENSIVE**	For heavily soiled pans and any other items that require a strong and effective wash. Perfectly designed for very dirty plates, pans, and pots.
P6		**GLASS**	A gentle cleaning cycle for your most precious, delicate dishes and crystals. A dedicated programme that protects the lifespan of your glassware.
P7	AUTO	**AUTO WASH**	A programme that automatically selects the most efficient and effective cycle duration and temperature according to the load and degree of soiling* *Only on some models
P8		**PREWASH**	Short, pre-wash for dishes used during the day, when you want to wait until you have a full load.

Programmes with prewash
For wash programmes with prewash, it is advisable to add a second dose of detergent (max. 6 g) directly in the machine.

Programme			Detergent for soaking (Prewash)	Washing temperature (°C)	Average wash duration [3] (min.)	Functions and Options		
						"HALF LOAD" [1] button	"EXPRESS" [1] button	"TABLETS" [2] button
P1	35'	WASH&DRY 35’	▬	60	35	YES*	N/A	YES
P2	59'	RAPID 59’	●	65	59	YES*	YES	YES
P3	ECO	ECO	▬	45	242	YES*	YES	YES
P4		UNIVERSAL	▬	60	129	YES*	YES	YES
P5		INTENSIVE	●	75	146	YES*	YES	YES
P6		GLASS	▬	45	96	YES*	YES	YES
P7	AUTO	AUTO WASH	▬	55-65	120-140	YES*	N/A	YES
P8		PREWASH	▬	▬	10	YES*	N/A	N/A

● = Add detergent for prewash

[1]= only on some models

[2]= Only if function is activated via SETTINGS.

***"HALF LOAD/HALF LOAD PRO" option available according to the model**

N/A= OPTION NOT AVAILABLE

[3]= With cold water (15°C) – Tollerance ±10%
With hot water the time remaining until the end of the programme is automatically displayed while the programme is running.
*Values are measured in a laboratory according to European Standard **EN60436** (consumption may vary according to conditions of usage).
The actual duration of the wash cycle varies according to the model.

The **ECO** programme is suitable for cleaning normally soiled tableware and is the most efficient programme for this use in terms of combined energy and water consumption. Furthermore, this programme is used by regulatory authorities to assess compliance with EU ecodesign legislation.

Except for the **ECO** programme, the values given for other programmes are indicative only. The cycle duration may be influenced by numerous factors, such as water temperature, mains water pressure, environmental temperature, the amount of detergent used and the number and distribution of dishes in the loading racks.

18. WATER SOFTENER UNIT

Depending on the source of the supply, water contains varying amounts of limestone and minerals which are deposited on the dishes leaving whitish stains and marks. The higher the level of these minerals present in the water, the harder the water is.
The dishwasher is fitted with a water softener unit which, through the use of special regenerating salt, supplies softened water for washing the dishes. The degree of hardness of your water can be obtained from your water supply company.

Regulating the water softener

The water softener can treat water with a hardness level of up to 90 °fH (French grading) or 50 °dH (German grading) through 8 settings. The settings are listed in the table below, with the relative mains water to be treated.

Level	Water hardness		Use of Regenerating salt	Water softener setting
	°fH (Franch)	°dH (German)		
0	0-5	0-3	NO	S0
1	6-10	4-6	YES	S1
2	11-20	7-11	YES	S2
3	21-30	12-16	YES	S3
4*	31-40	17-22	YES	S4
5	41-50	23-27	YES	S5
6	51-60	28-33	YES	S6
7	61-90	34-50	YES	S7

**** The softener unit is set in the factory at level 4 (S4) as this satisfies the requirements of the majority of users.***

Regulate the setting of your water softener unit according to the degree of hardness of your water, as follows:

The dishwasher must ALWAYS be off before start of this procedure.

1. Switch on the dishwasher with the **"ON/OFF"** button.
2. Keep the **"OPTIONS"** button pressed for about 5 sec.
3. The **"SETTINGS"** message appears on the display.
4. By pressing the **"PROGRAM SELECTION"** key you can select the successive parameters to be adjusted.
5. Select the **"SOFTENER"** setting.
6. Press the **"START/RESET"** button to confirm the selected parameter.
7. The set level appears on the display (the factory-set level is **"S4"**).
8. Press the **"PROGRAM SELECTION"** buttons to choose different settings levels.
9. Confirm your choice by pressing **"START/RESET"**.
10. **"SOFTENER"** will scroll on the display.
11. To exit the menu, press the **"ON/OFF"** key.

To change the water softener setting again, follow the same procedure.

WARNING!

If you cannot complete the procedure, turn the dishwasher off by pressing the "ON/OFF" button and start the procedure again from the beginning (STEP 1).

Information on resin regeneration with salt

The regeneration phase is carried out at the end of a washing cycle.

Approximately **3.5 litres** of water are consumed in the resin phase, with an energy consumption of approximately **1Wh** and an increase in cycle time of approximately **7 minutes**.

For the **Eco** cycle, it is as shown in the table.

Level	DISPLAY	Frequency
S0	DISPLAY S0	Never
S1	DISPLAY S1	1 every 9 cycles
S2	DISPLAY S2	1 every 7 cycles
S3	DISPLAY S3	1 every 5 cycles
S4	DISPLAY S4	1 every 4 cycles
S5	DISPLAY S5	1 every 3 cycles
S6	DISPLAY S6	1 every 2 cycles
S7	DISPLAY S7	Every cycle

19. TROUBLESHOOTING AND WARRANTY

If you believe the dishwasher is not working correctly, consult the quick guide provided below with some practical tips on how to fix the most common problems. **If the malfunction continues or recurs, contact the Technical Assistance Centre.**

BUG REPORTS

- **Models with a display:** errors are reported by a number preceded by the letter "E" (e.g. Error 2 = E2) and a short audio signal.
- **Models without a display:** an error is shown by a sequence of flashes of every LED. The error code is shown by the number of flashes followed by a pause of 5 seconds (example: two flashes – pause 5 seconds – two flashes – repeating = Error 2).

Only models with a display

Error displayed	**Meaning and solutions**
"NO WATER" with a short audio signal (only on some models). ***ERROR E2*** (with display) with a short audio signal	**The dishwasher does not fill with water**
	Make sure the water supply is open.
	Make sure the water supply hose is not bent or crushed.
	Make sure the drain pipe is at the proper height (see installation section).
	Close the water supply, unscrew the drain pipe from the back of the dishwasher and check that the "sand" filter is not clogged.
ERROR E3 (with display) with a short audio signal	**The dishwasher does not drain water**
	Make sure the drain pipe isn't bent, trapped or blocked, and the filter is not clogged.
	Make sure the siphon is not clogged.
ERROR E4 (with display) with a short audio signal	**Water leak**
	Make sure the drain pipe isn't bent, trapped or blocked, and the filter is not clogged.
	Make sure the siphon is not clogged.
ERROR E8 (with display) with a short audio signal	**The water heating element is not working correctly or the filter plate is clogged**
	Clean the filter plate.
ERROR E18 (with display) with a short audio signal	Water level problems; check clogged filter plate.
	Clean the filter plate.

ERROR E21 (with display) with a short audio signal	Uncontrolled water supply with open solenoid valve.
	Close the water tap immediately and disconnect the appliance from the power supply.
Any other code *(with display)*	Turn off and unplug the dishwasher, wait a minute. Turn on the machine and restart a program. If the error occurs again contact an Authorised Customer Service Centre directly.

Only models without a display

If malfunctions or faults occur when a programme is running, the indicator light that corresponds to the selected cycle will blink rapidly, and an intermittent audio signal will sound. In this case, turn the dishwasher off by pressing the **"ON/OFF"** button.
After checking to make sure the water supply is open, that the drain pipe is not bent and that the siphon or filters are not clogged, set the selected program again.
If the fault persists, contact the Technical Assistance Centre.

This dishwasher is equipped with an overflow safety device that, in the event of a problem, automatically discharges any excess water.

WARNING

To ensure the correct operation of the overflow safety device, we recommend not moving or tilting the dishwasher during operation. Should it be necessary to tilt or move the dishwasher, please ensure that the washing cycle is complete and that no water remains inside the appliance.

Other faults

FAULTS	CAUSE	SOLUTION
1. No programme works	Plug not connected to wall socket	Connect electric plug
	O/I button not pressed	Press button
	Door is open	Close door
	No electricity	Check
2. Dishwasher does not fill with water	See point 1	Check
	The water tap is closed	Open the water tap
	The water supply hose is bent	Eliminate the bends in the hose
	The filter of the water supply hose is clogged	Clean the filter at the end of the hose

FAULTS	CAUSE	SOLUTION
3. Dishwasher does not discharge water	Filter is dirty	Clean filter
	Drain pipe is bent	Eliminate the bends in the pipe
	The drain pipe extension is not correctly connected	Follow the instructions for connecting the drain pipe carefully
	The outlet connection on the wall is pointing downwards not upwards	Call a qualified technician
4. Dishwasher discharges water continuously	Position of the drain pipe is too low	Lift drain pipe to at least 40 cm above floor level
5. Spray arms are not heard to rotate	Excessive amount of detergent	Reduce amount of detergent Use suitable detergent
	Item prevents arms from rotating	Check
	Filtering plate and filter very dirty	Clean filtering plate and filter
6. On electronic appliances without a display: one or more indicator lights flashing quickly	Water supply tap turned off	Switch off the appliance. Turn on the tap. Re-set the cycle.
7. Dishes only partially washed	See point 5	Check
	Bottom of saucepans have not been washed well	Burnt on food remains must be soaked before putting pans in dishwasher
	Edge of saucepans have not been washed well	Reposition saucepans
	Spray arms are partially blocked	Remove spray arms by unscrewing ring nuts clockwise and wash under running water
	The dishes have not been loaded properly	Do not place the dishes too close together
	The end of the drain pipe is immersed in water	The end of the drain pipe must not come into contact with the outflow water
	An incorrect amount of detergent has been measured out, or the detergent is old and hard	Increase the measure according to how dirty the dishes are, or change detergent
	The cap of the salt container is not closed properly	Choose a more vigorous programme
	The wash programme is not thorough enough	Tighten it properly
8. Detergent not dispensed or partially dispensed	Cutlery, dishes, pans, etc., stop the detergent dispenser from opening	Position dishes so as not to obstruct the dispenser

FAULTS	CAUSE	SOLUTION
9. Presence of white spots on dishes	Mains water is too hard	Check salt and rinse aid level and regulate. Should the fault persist, contact the Technical Assistance Centre
10. Noise during wash	The dishes knock against one another	Re-check loading of dishes in the basket
	The revolving arms knock against the dishes	Re-check loading of dishes in the basket
11. The dishes are not completely dry	Inadequate air flow	Leave the dishwasher door ajar at the end of the wash program to allow the dishes to dry naturally
	Rinse aid missing	Fill the rinse aid dispenser

N.B.: Should any of the above situations result in a bad wash performance or insufficient rinsing, remove dirt deposits from the dishes by hand since the final drying cycle hardens the dirt, making it difficult to remove with a subsequent wash.
If the malfunction continues, contact the Technical Assistance Centre, quoting the model of the dishwasher. This is found on the plate on the upper section of the inside of the dishwasher door, or on the warranty. This information will make it possible to take quicker, more effective action.

Except for the list of spare parts available on our website, under no circumstances should you repair or attempt to repair the appliance yourself or have the appliance repaired by inexperienced and / or unqualified persons. Repairs carried out by inexperienced and / or unqualified persons can cause injury or serious malfunction of the equipment and damage to property. It is advisable to contact our Authorized Technical Assistance Centres.

We recommend that you always use original spare parts, which can be obtained from our customer service for a period of at least **10 years** from the moment the appliance is put into circulation within the European Economic Area.

⚠ WARNING

The manufacturer cannot be held responsible for any damage to things and people and / or for safety issues resulting from repairs not carried out by an Authorized Technical Assistance Centre or by a service provider authorised by the manufacturer in accordance with company guidelines relating to the repair and maintenance of its products. Any damage caused to the product by unauthorized personnel during a repair attempt will not be covered by the conventional warranty.

From 1 March 2021, energy and environmental information relating to the energy labelling of household appliances and the specifications for their eco-design are visible in Europe in the product database (EPREL) at the following link **https://eprel.ec.europa.eu/** or through the QR code located on the energy label.

Assistance and Warranty
The product is guaranteed under the law, and under the terms and conditions stated on the warranty certificate included with the product. The certificate should be stored and shown to an authorized Technical Assistance Centre in case of need, together with the proof of purchase. You can also check the warranty conditions on our website.
For assistance, please fill in the online form or contact us at the number indicated on the support page of our website.

The manufacturer declines all responsibility for any printing errors in this booklet. Moreover, the manufacturer reserves the right to make any changes deemed useful to its products without changing their essential characteristics.

20. ENVIRONMENTAL CONDITIONS

This appliance is marked a cording to the European directive 2012/19/EUon Waste Electrical and Electronic Equipment (WEEE).

WEEE contains both polluting substances (which can cause negative consequences for the environment) and basic components (which can be re-used).

It is important to have WEEE subjected to specific treatments, in order to remove and dispose properly all pollutants, and recover and recycle all materials.

Individuals can play an important role in ensuring that WEEE does not become an environmental issue; it is essential to follow some basic rules:

- WEEE should not be treated as household waste;
- WEEE should be handed over to the relevant collection points managed by the municipality or by registered companies. In many countries, for large WEEE, home collection could be present.

In many countries, when you buy a new appliance, the old one may be returned to the retailer who has to collect it free of charge on a one-to-one basis, as long as the equipment is of equivalent type and has the same functions as the supplied equipment.